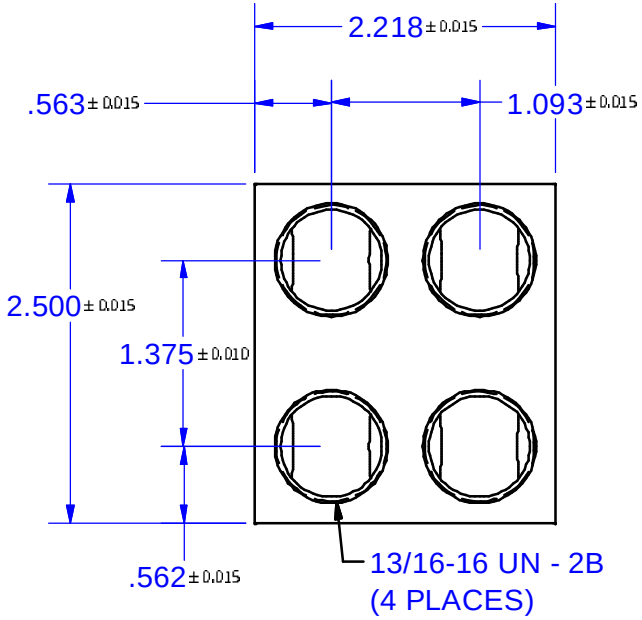

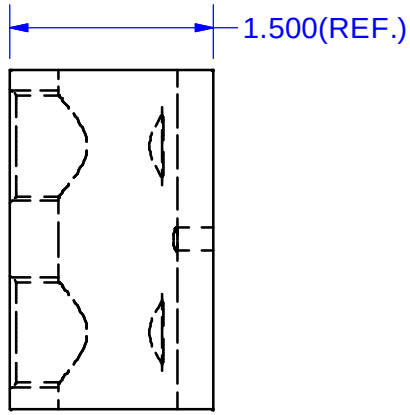

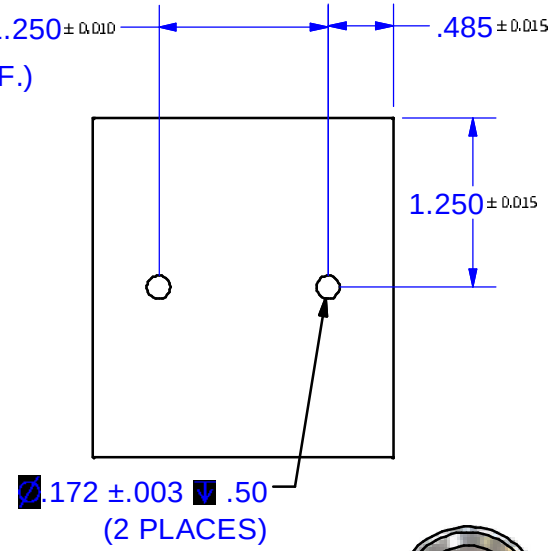

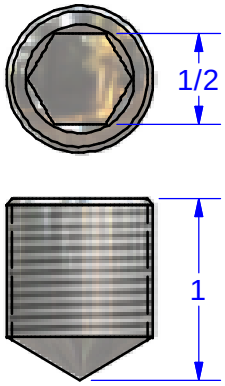

SCREW #11941

PART MARKED
IHI
2P500
UL LOGO
500MCM-6
AL7CU

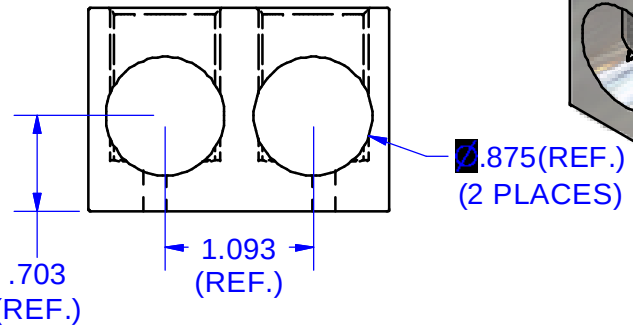

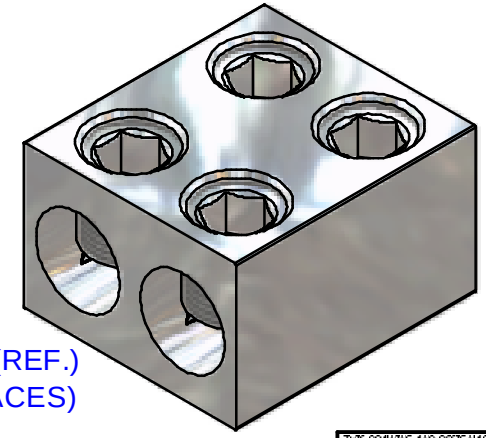

NOT FOR USE WHERE FAILURE CREATES A HAZARD TO HUMAN HEALTH OR SAFETY. ALL PRODUCTS ARE SUBJECT TO THIS FULL DISCLAIMER: http://www.ihiconnectors.com/disclaimer.html

FOR FURTHER INFORMATION ON THE PROPER USE OF THIS PRODUCT IN SPECIFIC APPLICATIONS SEE
http://www.ihiconnectors.com/GuideToFlexFlexibleFineStrandedWireCableMechanicalLugsFAQ.html

http://www.ihiconnectors.com/Technical-Data-Installation.htm

THIS DRAWING AND DESIGN ARE THE PROPERTY OF INTERNATIONAL HYDRAULICS, INC., CLEVELAND, OHIO, AND MAY NOT BE DUPLICATED, USED FOR THE BASIS OF DESIGN OR MANUFACTURE WITHOUT THE WRITTEN PERMISSION OF INTERNATIONAL HYDRAULICS, INC., CLEVELAND, OHIO.

GENERAL TOLERANCES
± .015 (±0.38)

INTERNATIONAL HYDRAULICS, INC.

TITLE:
2P500
CONNECTOR

MATERIAL:	SIZE:	DRAWN BY:	DWG NO.:	REV:
6061-T6 (11499)		TDS	2P500-(SALES)	

FINISH:	DATE:	
TIN PLATE EMS	11/20/08	THIS IS A CAD DRAWING, DO NOT MANUALLY REVISE